Morphology and release kinetics of technetium-99m(V) dimercaptosuccinic acid loaded, poly(lactic-co-glycolic) acid microspheric delivery system. An experimental approach that may be used for targeted radiation treatment

Jaya Shukla[1], **Guru Pad Bandopadhyaya**[1], **Indira Kumari Varma**[2], **Rakesh Kumar**[1], **Subir Kumar Maulik**[3]

1. *Department of Nuclear Medicine and*
2. *Center for Polymer Science and Engineering Indian Institute of Technology, New Delhi 110016, India*
3. *Department of Pharmacology, All India Institute of Medical Sciences, New Delhi 110029, India*

Keywords: Double emulsion – Microspheres prepared with PVA – Surfactant concentrations – Encapsulation of DMSA

Correspondence address:
Professor Dr
Guru Pad Bandopadhyaya
Department of Nuclear Medicine
All India Institute of Medical Sciences, New Delhi 110029, India.
E-mail- guru47@gmail.com
Telephone: 9111-26594322,
Fax: 9111-26588663

Received:
14 November, 2006
Accepted revised:
31 January, 2007

Abstract

The aim of our studies was to formulate a system that delivers the required radiation dose to the tumor site and minimize the harm to other organs or tissues. The poly (lactic-co-glycolic acid, 75:25; 50:50) microspheric radiation delivery system was fabricated using double emulsion solvent evaporation technique for the encapsulation of technetium-99m(V)dimercaptosuccinic acid (^{99m}Tc(V)DMSA). Microspheres of different sizes (0.2-20.0 μm) were prepared. The initial burst in microspheres with 10% and 1% poly vinyl alcohol (PVA) in the presence of poly ethylene glucol (PEG) was as 30% and 16% respectively, however the initial burst in microspheres without the PEG was 9% and 1.2% respectively. The results indicated that smaller microspheres had higher encapsulation (68%) of ^{99m}Tc(V)DMSA than larger microspheres (15%). The stirring rate changed the surface of the microspheres from smooth spherical, to spherical, porous. The ratio of co-polymers (75:25/50:50) affected the release kinetics. *In conclusion*, our studies with varied surfactant concentrations, co-polymer concentrations and speed of solvent evaporation, on the morphology and release kinetics of ^{99m}Tc(V)DMSA from the microspheres, may be applied for the fabrication of targeted radiotherapeutic microspheres by substituting ^{99m}Tc(V)DMSA with rhenium-188 (V) DMSA (^{188}Re(V)DMSA). ^{188}Re(V)DMSA is a therapeutic analogue of ^{99m}Tc(V)DMSA and both share similar radiopharmaceutical properties.

Hell J Nucl Med 2007; 10(1): 9-13

Introduction

In tumor therapeutics it is important to limit the damage of normal tissues while eliminating the growth and spread of the tumor. Chemotherapy and radiotherapy from external sources are restricted due to the harm they impose on normal cells, either near or distant the tumor. Controlled release systems are of great interest for the treatment of cancer where site-specific administration improved treatment efficacy and reduced adverse side effects are of main concern [1, 2]. The biodegradable polymeric delivery systems are capable of providing a sufficient localized radiation dose from radiotherapeutic drug loaded microspheres to the tumor site and can also be used as an alternative to external beam radiotherapy [3, 4].

Drug delivery systems through microspheres, of lactic acid and glycolic acid (poly-lactic-glycolic acid-PLGA) have been extensively investigated due to their versatility, biocompatibility, commercial availability, and hydrolytic degradation into resorbable harmless products [5, 6]. Drug release property from PLGA microspheres, mainly depends on the composition of the co-polymer. Increasing number of glycolic acid (GA) units' increases hydrophilicity, which enhances release of the drug. Comptothecin and taxol have been successfully incorporated into PLGA microspheres [7, 8]. Intra-arterial embolization with radioactive biodegradable microspheres of unresectable tumors and of metastases is considered an effective targeted treatment modality [9]. Two of the most important parameters for the in-vivo use of radiopharmaceuticals are their stability and target specificity. The target specificity can be improved by using more specific chelators. Dimercaptosuccinic acid (DMSA) is a very good metal chelator and pentavalent DMSA has high affinity for tumors [10]. Technetium-99m(V)dimercapto-

succinic acid (^{99m}Tc(V)DMSA) has been demonstrated to remain stable in saline and biological fluids [11].

^{99m}Tc(V)DMSA has been extensively used for the detection of neurogenic /neuroendocrine tumors [12-14]. Rhenium $^{186/188}$Re(V)DMSA is a potential therapeutic analogue of ^{99m}Tc(V)DMSA which forms a small complex as $[MO(DMSA)_2]^-$, in which the M (Tc, Re) is coordinated square-pyramidically by the four thiolates and by an apical oxo-ligand and consists of mixtures of three stereo isomers of the square pyramidal mononuclear complex, as shown in Figure 1 [15, 16]. Biodistribution studies of ^{188}Re(V)DMSA have shown that its general pharmacokinetic properties are similar to those of ^{99m}Tc(V)DMSA [17]. The biodegradable PLGA microspheres delivery system encapsulated with ^{99m}Tc(V)DMSA has been synthesized and characterized by physico-chemical analysis for the delivery of radiation to the tumor site [18].

The objective of the present studies was to determine the effects of various parameters such as of surfactant concentration, co-polymer concentration and the speed of solvent evaporation, on the morphology and release kinetics of ^{99m}Tc(V)DMSA as released from the microspheres. Since ^{99m}Tc is an imaging analogue of therapeutic ^{188}Re, these studies may be a valuable reference for the fabrication of targeted therapeutic ^{188}Re(V)DMSA microspheres.

Materials and methods

Materials

DMSA, PLGA (75:25) and PLGA (50:50) (PLGA, MW = 90,000-126,000 g/mol and 40,000-75,000 g/mol), poly(vinyl alcohol) (PVA, MW=30,000-70,000 g/mol) and poly ethylene glycol (PEG, MW= 5000) were used, purchased from Sigma-Aldrich, USA. A molybdenum-99/ technetium-99m (^{99}Mo-^{99m}Tc) generator from Amersham, U.K. was used to provide the ^{99m}Tc source. Dichloromethane (DCM) and other reagents were of analytical grade, from BDH chemicals, India.

Preparation of radiolabelled DMSA

Technetium-99m pertechnetate ($^{99m}TcO_4^-$) was freshly eluted in normal saline from a ^{99}Mo-^{99m}Tc generator. ^{99}Mo as sodium molybdate was immobilized on a column of alumina (Al_2O_3) due to its high affinity for alumina.

One gram of DMSA was dissolved in sodium bicarbonate solution. Three hundred milligrams of ascorbic acid and 450 mg $SnCl_2$, dissolved in 0.1N HCl, were added in the DMSA solution and lyophilized. Sodium pertechnetate (1850 MBq in 0.1ml) was added in the lyophilized DMSA powder (containing 50 mg DMSA). The pH of the solution was adjusted to 9.0. The efficiency of radiolabeling of ^{99m}Tc(V)DMSA was assessed using instant thin-layer chromatography (ITLC). To calculate free and bound pertechnetate, ITLC silica gel strips were developed in n-butanol: acetic acid: water (3:2:3) and in saline, separately [19] for different intervals of time (10 min, 12 h and 24 h) after preparation. The radiochemical purity was calculated as the percentage of ^{99m}Tc(V)DMSA relative to total activity.

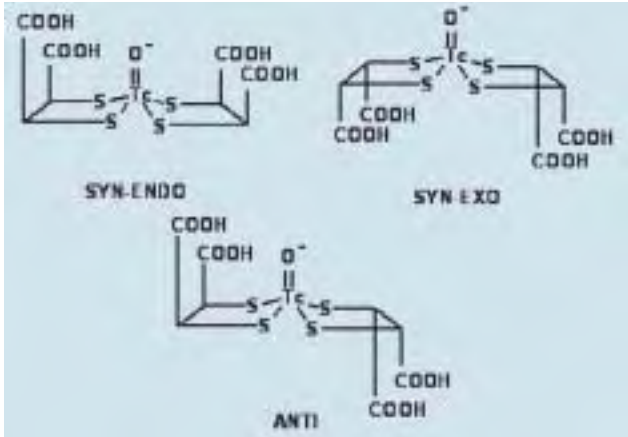

Figure 1. The chemical small structure of ^{99}mTc(V)DMSA

Preparation and characterization of microspheres

Labeled and unlabeled DMSA encapsulated microspheres were prepared using double emulsion solvent evaporation technique as earlier described by us [18,20]. The amount of PLGA, of DMSA, and the temperature were kept constant while PVA (surfactant) concentrations used for the preparation of microspheres, varied. The oil phase (o) was prepared by dissolving 50 mg PLGA (75:25) or PLGA (50:50) in 3 ml DCM. Polyethylene glycol, (PEG) (5% w/w) was then added to this oil phase. By mixing the oil phase with an aqueous DMSA solution (w_1), (unlabeled DMSA and ^{99m}Tc(V)DMSA 1,850 Bq), followed by homogenization at 10,000 rpm for 3 min, the primary emulsion (w_1/o) was formed. To the primary emulsion, 10 ml of varying concentrations of aqueous solutions of PVA (14%, 10%, 7%, 4%, 1%, 0.1%, and 0.4% w/w) were added (w_2) and homogenized for 4 min at 10,000 rpm to form the secondary emulsion (w_1/o/w_2). Emulsion was then stirred using a magnetic stirrer at room temperature for 3 h, to evaporate DCM. The effect of the solvent evaporation speed on the microspheres was studied by using two different speeds of stirring (400 or 1000 rpm). Microspheres were collected by centrifugation at 12,000 rpm for 30 min and were washed thrice with water. Microspheres characterization was done by scanning electron microscope (LEO 435 VP, Cambridge, U.K.). The size determination and counting was done using Lieca Q-win (Cambridge, U.K.) software. Thermal stability of the microspheres was studied by dynamic thermogravimetry in nitrogen atmosphere using a TA 3300 thermal analyzer having a 951 TG module (U.S.A.). Thermogravimetry analysis (TGA) measures the mass loss as a function of temperature under controlled rate of heating. In our experiments heating rate of 10 °C/min and a sample weight of 10±2 mg, were used.

In vitro drug release studies

The in vitro drug release of microspheres was monitored by a UV-160 A, (Shimadzu spectrophotometer, Germany) [16]. ^{99m}Tc(V)DMSA microspheres of different samples, 5mg/ml each, were suspended in water for injection (pH-7). The samples were fixed horizontally with constant and slow stirring (400 rpm) at 37°C. Supernatants were analyzed by spec-

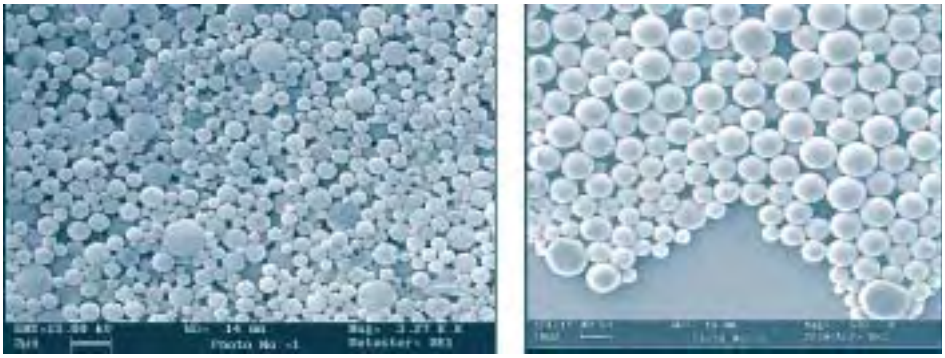

(a) (b)

Figure 2. SEM micrograph of microspheres prepared with (a) 10% PVA concentration and (b) 1% PVA concentration

trophotometer for ^{99m}Tc(V)DMSA at 410 nm after centrifugation at 8000-10000 rpm for 10 min, and replaced by fresh water. The optical densities were recorded hourly for initial burst, after 12 h and after every 24 h up to 22 days to study the release characteristics of the microspheres.

A 'ready to use' stock of DMSA was prepared and lyophilized. Labeled and unlabeled DMSA microspheres were prepared using different polymers: PLGA(50:50) and PLGA(75:25), and varied surfactant PVA, concentrations.

Results

Morphology and characterization of the microspheres

The radiochemical yield of ^{99m}Tc(V)DMSA was more than 98% as assessed by ITLC. The radiopharmaceutical was stable up to 24 h. The size of the microspheres observed under scanning microscope ranged between 0.2 μm to 20.0 μm. The microspheres were spherical in shape with smooth surfaces without any aggregation or adhesion but heterogeneous in size (Fig. 2). The concentrations of labeled and unlabeled DMSA, of PLGA, the amount of DCM, and the temperature, remained constant. The size-distribution of the microspheres prepared with different PVA concentrations, is shown in Figure 3.

Thermal characterization

Thermogravimetric analysis (TGA) of PLGA indicated that it was stable up to 250 ^{0}C and above this temperature it looses the mass (18). The initial decomposition temperature (IDT) of maximum rate of mass loss (T_{max}), final decomposition temperature (T_f) and residual weight (char yield) at 400 ^{0}C (%) from TG traces of various samples analysed were recorded. The char yield was 0.57% in PLGA and 8.26% in DMSA. The DMSA loaded PLGA microspheres had the char yield of 1.76%- 5.77% (Table 1). The percent loading of DMSA in the microspheres was calculated on the basis of residual weight at 400^{0}C by applying the following formula:

$$\textit{Char yield of microsphere} = 8.26\,x + 0.57(1-x)$$

Where x is the weight fraction of DMSA while (1-x) is the weight fraction of PLGA in the microsphere formulation.

The highest incorporation of DMSA (68%) was achieved by the microspheres sized between 0.2-1.5 μm and the lowest encapsulation (15%) by the microspheres of 8.0-16.0 μm in size. These results indicated that small DMSA microspheres had higher encapsulation than larger microspheres.

In vitro drug release studies

For drug release studies, ^{99m}Tc(V)DMSA was replaced by DMSA. The ^{99m}Tc(V)DMSA release occurred in two phases. An initial burst release in which a significant amount of ^{99m}Tc(V)DMSA was released within 12 h, followed by a sustained release phase. Release kinetics of mircospheres formulations are shown in Table 2.

Effect of PLGA composition on release kinetics sizes

Microspheres of PLGA (50:50) prepared with PEG showed a 35% initial burst and the release reached up to 50% in 12 h

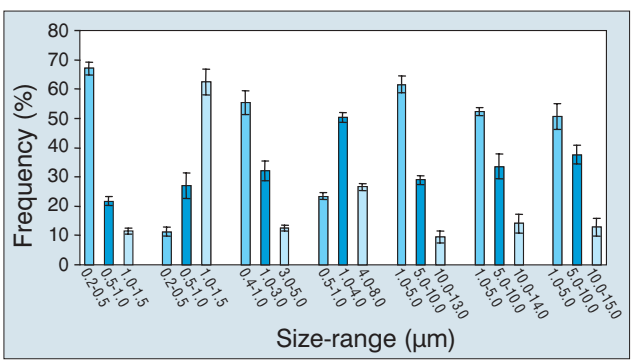

Figure 3. Size distribution of microspheres prepared with different concentrations of PVA (bars show ±SD)

Table 1. *Percent encapsulation of DMSA in different formulations*

Recognition	PVA (%)	Size-range (μm)	Char yield (%) (TGA)	DMSA encapsulation (%)
DMSA	–	–	8.26	–
PLGA (75:25)	–	–	0.57	–
A	14	0.2-1.5	5.77	67.6
B	10	0.3-2.0	5.29	61.4
C	7	0.4-5.0	4.61	52.5
D	4	1.0-8.0	3.9	43.3
E	1	3.0-13.0	3.24	34.4
F	0.4	8.0-16.0	1.76	15.6

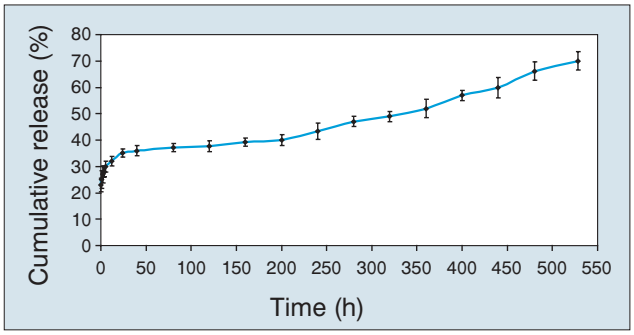

(a)

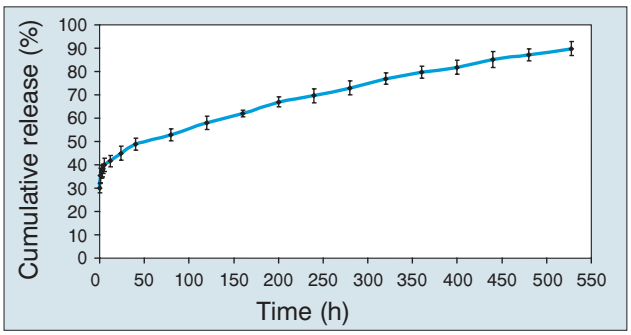

(b)

Figure 4. a) Release kinetics of microspheres prepared with PLGA (75:25). Bars represent values lying between 95% of confidence interval. b) Release kinetics of microspheres prepared with PLGA (50:50). Bars represent values lying between 95% of confidence interval

Table 2. *Release kinetics of microsphere formulations*

Formulations	Initial burst	
	Day 1 (mean %)	Day 2 (mean %)
PEG+42% DMSA (<0.2μm)	30	23
42% DMSA (0.2μm)	9	3
PEG+50% DMSA (3-9μm)	16	12
50% DMSA (3-9μm)	1.2	0.3

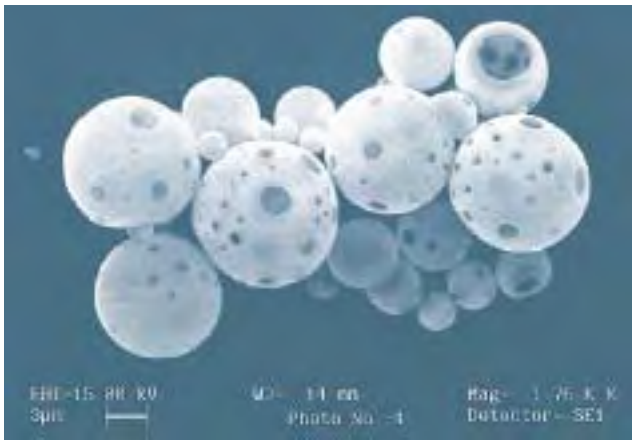

Figure 5. A SEM picture showing the effect of solvent evaporation at high speed

time. Microspheres of PLGA (75:25) prepared with PEG showed up to 23% initial burst which reached up to 32% in 12 h time. The amount of cumulated ^{99m}Tc(V)DMSA release from PLGA (50:50) and from PLGA (75:25) microspheres over 21 days, was approximately 88% and 70%, respectively (Fig. 4a and 4b).

Effect of stirring rate

In our studies the microspheres were spherical and smooth, when solvent evaporation took place at low speed (400 rpm), as was also demonstrated by Babay et al (1988) [21]. We observed that when the stirring rate was stepped up from 400 rpm to 1000 rpm, the size of microspheres was reduced. However, microspheres fabricated at higher stirring speed (1000 rpm) were spherical but with several pores on their surface as observed under the standard error of the mean (SEM) (Fig. 5).

Discussion

VA molecules being an amphiphilic surfactant, align themselves at the droplet surface stabilize droplets by lowering the free energy at the interface between the two phases and thus resist coalescence and flocculation of the microspheres [22].

The size of the microspheres decreased with the increase in PVA concentrations. The possible explanation is that the high PVA concentrations attributed to the increase in the viscosity of the internal phase, which consequently reduced the diameter of micro emulsion droplets. At low PVA concentrations, the droplets were poorly stabilized, tended to coalesce and therefore formed larger particles. The effect of PVA concentrations, on the particle size distribution of microspheres, is in accord, agrees with the previous findings of Arshady (1990) [23].

After 12 h, ^{99m}Tc(V)DMSA release profiles displayed sustained but slow release. PEG plays an important role in modifying surface morphology and drug release of the microspheres. PEG coating prevents microspheres from opsonization. However PEG being water soluble, when suspended in an aqueous medium created small holes on the microspheres. This in turn increased the initial bursts and the net release of the ^{99m}Tc(V)DMSA.

According to our experiments, microspheres of PLGA (75:25) showed less initial burst and a relatively slower release property as compared to microspheres of PLGA (50:50) under the same experimental conditions (10% PVA) and therefore we found PLGA (75:25) a better choice for targeted radiation treatment.

The pores on the surface of microspheres were considered to be due to the rapid evaporation of DCM. During the solvent evaporation process at high speed, crusts were formed on the surface of the droplet which rendered the evaporation of the solvent entrapped within the droplets, difficult and as a result a vapor pressure was built up. With the continuation of the drying process the solvent's partial pressure inside the droplets increased rapidly, while its build-up rate was much faster than the solvent permeation rate outside of the crust. As a result, small eruption openings were created and pores were

formed. The water soluble DMSA migrated towards the aqueous dissolution medium, which subsequently concentrated at the surface of the microspheres and led to its increased release from the microspheres [24].

As already mentioned before, our aim was to formulate a system that delivers the required radiation dose to the tumor site with minimal leakage so that harm to other organs or tissues would be negligible. However, total leak proof systems are impossible to formulate. ^{99m}Tc(V)DMSA, an imaging analog of therapeutic ^{188}Re(V)DMSA, was used in our studies because it has a tendency to accumulate within the tumor. Results of our earlier studies have shown that ^{99m}Tc(V)DMSA remained intact inside the microspheres the tumor due to enhanced permeability and retention property of the tumor [25]. The radiation leakaged (^{188}Re(V)DMSA) from the microspheres will also be localized in the tumor due to tumor-tropic nature of this radiopharmaceutical [12-14]. *In conclusion,* the present study indicated that radiolabeled pentavalent DMSA microspheres of a desired size, could be fabricated and their release rate of the radiopharmaceutical could be manipulated by changing PLGA co-polymer concentration, surfactant concentration and PEG adsorption on the microspheres surface. These studies may play an important role in the development of a targeted radiation delivery system for the treatment of neurogenic/ neuroendocrine tumors.

Acknowledgements: The authors are thankful to the Center for Medical Education and Technology, for illustration, Electron Microscopy facilities for morphology, to All India Institute of Medical Sciences, New Delhi, India and to the Indian Institute of Technology, Delhi, India, for microsphere characterization.

Bibliography

1. Birnbaum DT, Kosmala JD, Henthorn DB, Brannon-Peppas L. Controlled release of β-estradiol from PLGA microparticles: the effect of organic phase solvent on encapsulation and release. *J Controlled Release* 2000; 65: 375-387.
2. Couvreur P, Blanco-Prieto MJ, Puisieux F, et al. Multiple emulsion technology for the design of microspheres containing peptides and oligopeptides. *Adv Drug Deliv Rev* 1997; 28: 85-96.
3. Edulund U, Albertsson AC. *Advances in Polymer Science, Degradable Aliphatic Polyester,* Ed. A.C Alberton, Springer. 2002, 157: 68.
4. Hafeli UO, Sweeney SM, Beresford BS, et al. Biodegradable magnetically directed ^{90}Y-microspheres novel agents for targeted intracavitary radiotherapy. *J Biomed Mater Res* 1999, 28: 901-908.
5. Kronenthal RL. Biodegradable polymers in medicine and surgery. In: Kronenthal RL, Oser Z, Martin E. (eds), *Polymers in Medicine and Surgery.* Plenum Press: New York; 1975. p 119.
6. Lewis DH, Controlled release of bioactive agents from lactide/ glycolide polymers. In: Chasin M, Langer R. (eds), *Biodegradable polymers as drug delivery systems.* Marcel Dekker: New York; 1990. Chap 1, p 1.
7. Ertl B, Plazer P, Wirth M, Gabor F. Poly (D, L-lactic-co-glycolic acid) microspheres for sustained delivery and stabilization of camptothecin. *J Controlled Release* 1999; 61: 305-317.
8. Mu L, Feng SS. Fabrication, characterisation and in vitro release of paclitaxel (Taxol) loaded poly (lactic-co-glycolic acid) microspheres prepared by spray drying technique with lipid/cholesterol emulsifiers. *J Controlled Release* 2001; 76: 239 - 254.
9. Edulund U, Albatsson, AC. *Advances in Polymer Science*, *Degradable Aliphatic polyester,* Ed. AC., Alberton, Springer 2002; 157 and 168.
10. Denoyer D, Perek N, Jeune NL, et al. Evidence that ^{99m}Tc(V) DMSA uptake is mediated by NaPi cotransporter type III in tumour cell lines. *Eur J Nucl Med Mol Imaging* 2004; 31: 77-84.
11. Deutsch E, Libson K, Vanderheyden JL, et al. The chemistry of rhenium and Technetium as related to the use of isotopes of these elements in therapeutic and diagnostic nuclear medicine. *Nucl Med Biol* 1986; 13: 465-477.
12. Ohta H, Yamamoto K, Endo K, et al. A new imaging agent for medullary carcinoma of the thyroid. *J Nucl Med* 1984; 25: 323-325.
13. Ohta H, Endo K, Fujita T, et al. Imaging of soft tissue. Tumours with Tc(V)-99m dimercaptosuccinic acid. A new tumour-seeking agent. *Clin Nucl Med* 1984; 9: 568-573.
14. Ohta H, Endo K, Fujita T, et al. Clinical evaluation of tumour imaging using ^{99m}Tc(V) DMSA : A new tumour-seeking agent. *Nucl Med Commun* 1988; 9: 105.
15. Davison A, Orvig C, Trop H, et al. Preparation of oxobis (dithiolato) complex of technetium(V) and rhenium(V). *Inorg Chem* 1980; 19: 1988-1992.
16. Blower PJ, Singh J, Clarke SEM. The chemical identity of pentavalent technetium-99m-dimercaptosuccinic acid. *J Nucl Med* 1991; 32: 845-849.
17. Blower PJ, Kettle AG, O'Doherty MJ, et al. ^{99m}Tc(V)DMSA quantitatively predicts ^{188}Re(V)DMSA distribution in patients with prostate cancer metastatic to bone. *Eur J Nucl Med* 2000; 27: 1405-1409.
18. Shukla J, Bandopadhyaya GP, Varma I K. ^{188}Rhenium(V)-dimercaptosuccinic acid loaded poly (lactic-co-glycolic) acid microspheres for targeted radiotherapy: Production and effectivity. *Pharmazie* 2005; 60: 583-587.
19. Saha GB (Ed) *Fundamentals of Nuclear Pharmacy*, Springer Verlag: New York; 1992. p 150.
20. Chen YH, Illum L, Davis SS. A Poly (D, L-lactide-co-glycolide) microspheres depot system for delivery of haloperidol. *J Controlled Rel* 1998; 55: 203-212.
21. Babay D, Hoffman A, Benita S. Design and release kinetics pattern evaluation of indomethacin microspheres intended for oral administration. *Biomaterials* 1988; 9: 482-488.
22. Park, K. *Controlled Drug Delivery: Challenges and strategies*, American Chemical Society, Washington DC; 1997. p 529-557.
23. Arshady R. Microspheres and microcapsules, a survey of manufacturing techniques: part III: Solvent evaporation. *Polym Engin Sci* 1990; 30: 915-924.
24. Jameela SR, Suma N, Jayakrishnan A. Protein release from poly (ε-caprolactone) microspheres prepared by melt encapsulation and solvent evaporation techniques: A comparative study. *Biomater Sci Polym Edn* 1997; 8, 457-466.
25. Maeda H, Wu J, Sawa T, et al. Tumour vascular permeability and the EPR effect in macromolecular therapeutics: A review. *J Controlled Rel* 2000, 65: 271-284.